MASTEK 7.5m TANKER MOUNTED DRIBBLE BAR (TMDB0286-01)

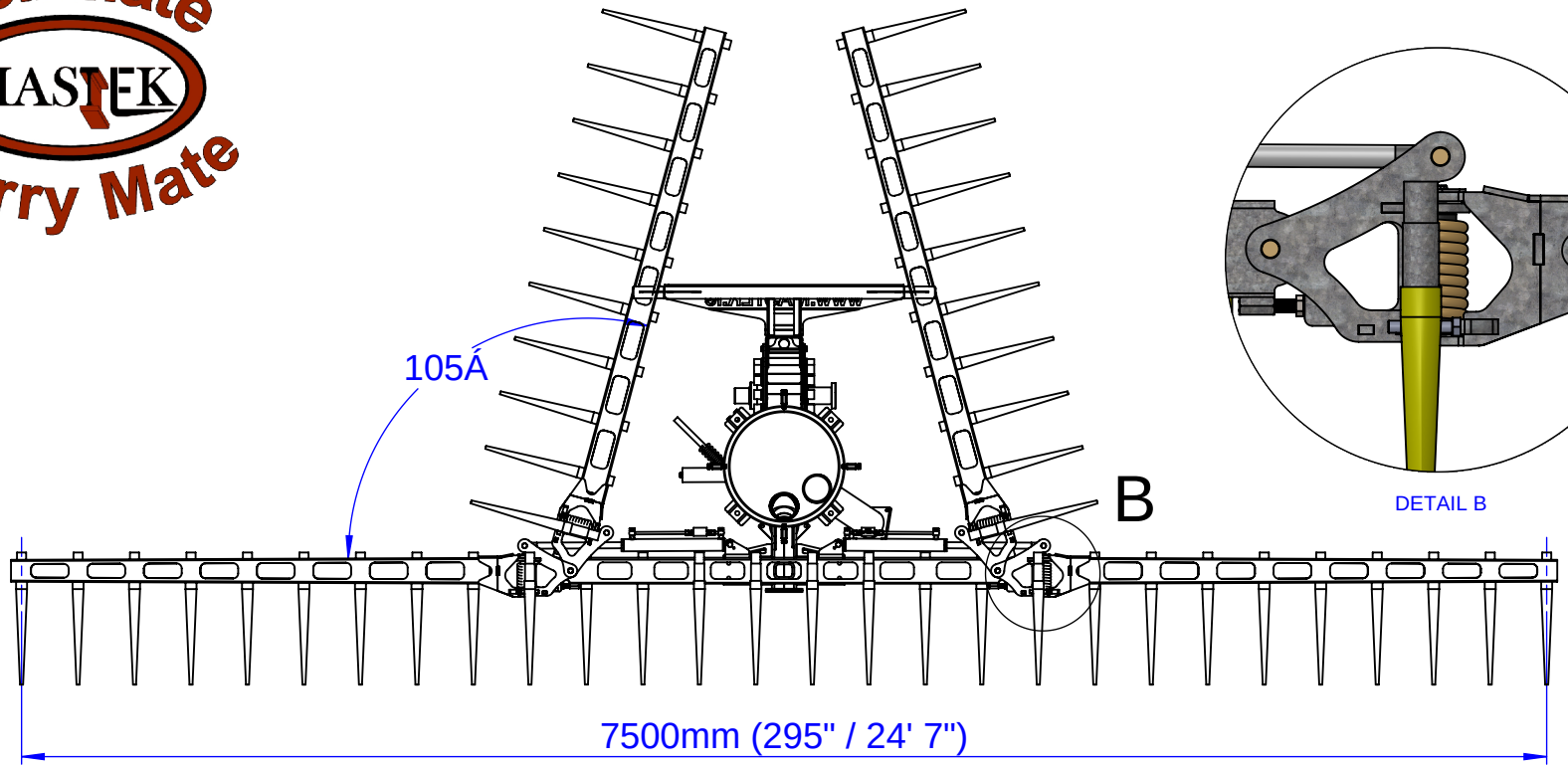

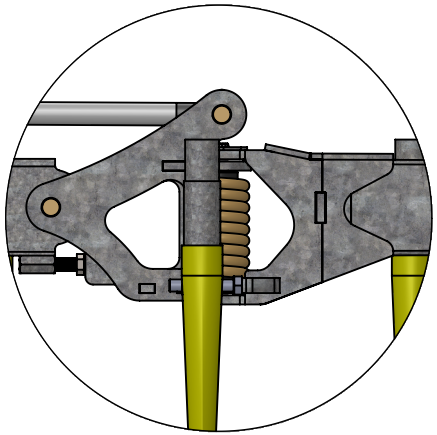

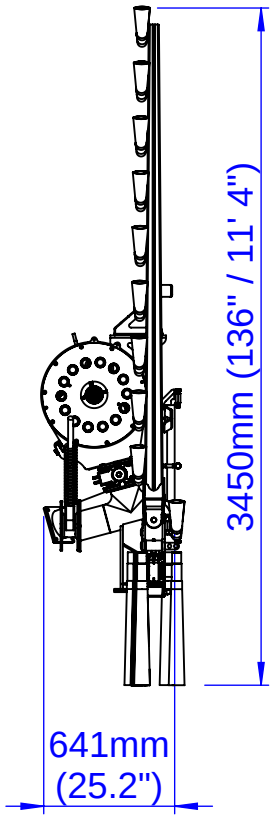

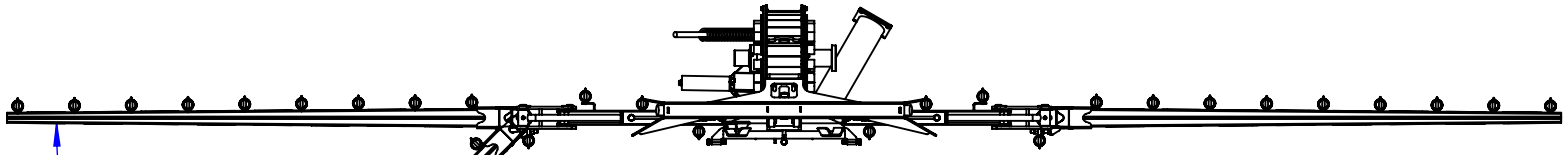

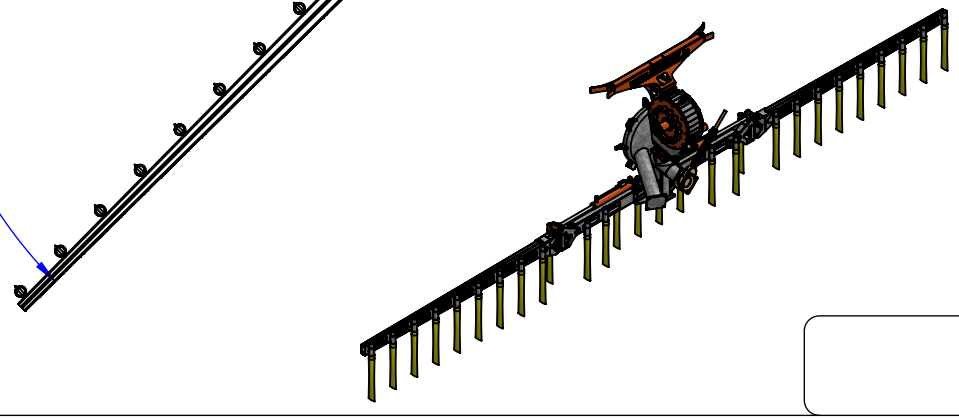

WEIGHT: 415 Kg - 425 Kg

STANDARD FEATURES:

HYDRAULIC FOLDING MECHANISM
INTEGRATED MACERATOR
SPRING LOADED HINGED ARMS
BOLT-ON RETRO-FIT (NO WELDING REQUIRED)
LIGHTWEIGHT DURABLE CONSTRUCTION

Mastek Limited *Cootehill Business Park, Cootehill, Co. Cavan, Ireland*
Phone: +353 49 5555 953 *Fax: +353 49 5555 954*
Email: enquiries@mastek.ie *Web: www.mastek.ie*

TMDB0287-01-A